PC300

Surge anticipating valve

Product specification sheet

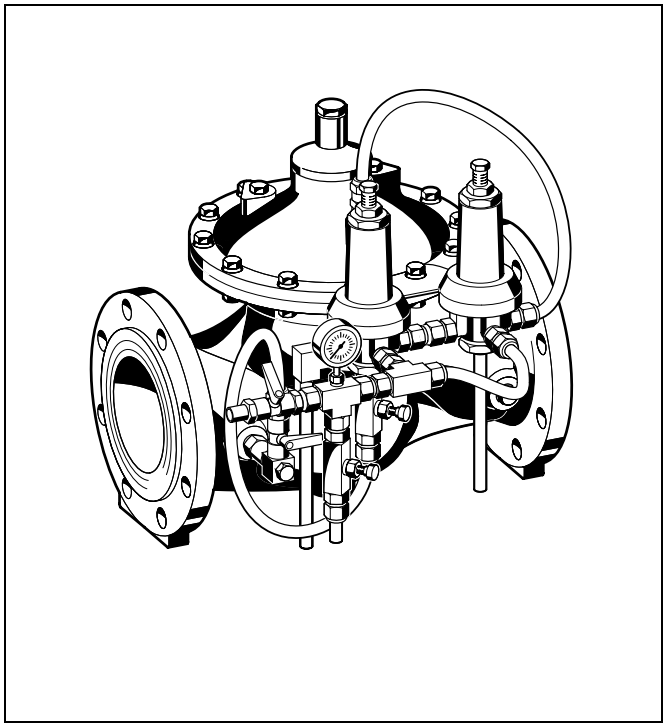

Construction

The surge anticipating valve comprises:

- Housing with PN16 flanges per ISO7005-2, EN1092-2
- 2 pilot valves 66-300
- Fine regulation valve
- Control circuit with ball valves on inlet and outlet
- Control circuit with integral rinsable filter insert

Materials

- Ductile iron housing, cover plate and diaphragm plate (ISO 1083), powder coated
- Red bronze/stainless steel regulating cone
- Stainless steel pressure spring and control rod
- Fibre-reinforced NBR diaphragm
- NBR and EPDM seals
- Stainless steel valve seat
- High quality synthetic material control circuits
- Brass compression fittings
- Brass pilot valve housings
- Stainless steel filter insert

Application

Surge anticipating valves of this type for pumped systems are used for the prevention of negative pressure and water pressure shocks in long pumped pipework systems caused by sudden pump shutoff (e.g. from power failure).

Special Features

- High flow capacity
- Light weight
- High control accuracy
- Powder coated inside and outside - Powder used is physiologically and toxicologically safe
- Integral control circuit and ball valves
- No external energy required for operation

Range of Application

Medium	Water
Operating pressure	Max. 16 bar
Opening pressure	1 - 7 bar

Technical Data

Operating temperature	Max. 80 °C
Nominal pressure	PN 16 PN 25 on request
Minimum pressure	0.7 bar
Connection size	DN 65 - 450

EN0H-1338GE23 R0807 • Subject to change

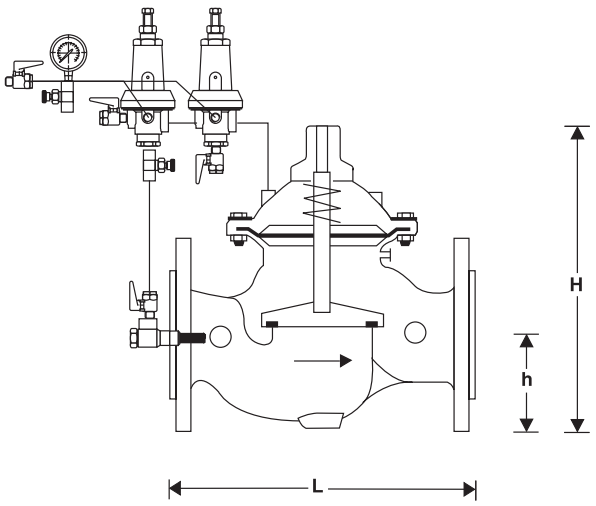

Method of Operation

Surge anticipating valves of this type are fitted to a tee-piece connector branching from the main pumped pipework. They open immediately the pressure in the main pumped pipework falls below the static pressure or reaches the maximum permissible pressure in the main pipework. The valve slowly closes once the pressure returns to the static level.

Options

PC300- ... A = Housing with flange, PN 16, ISO 7005, EN 1092-2

PC300- ... Z = PN 25, on request

Connection size

Connection size	DN	65	80	100	150	200	250	300	350	400	450
Weight	approx. kg	17	26	41	84	161	249	409	514	826	949
Dimensions	(mm)										
	L	292	310	350	480	600	730	850	980	1100	1200
	H	294	400	433	558	650	823	944	990	1250	1250
	h	93	100	110	143	173	205	230	260	290	310
k_{VS}-value	m^3/h	43	103	167	407	676	1160	1600	1600	3300	3300

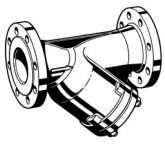

FY69P

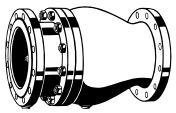

RV283P

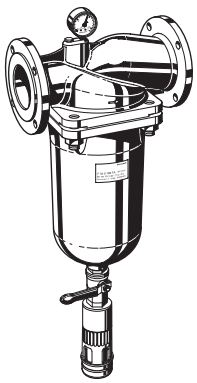

F76S-F

Accessories

FY69P Strainer

With double mesh, grey cast iron housing, powder coated inside and outside.
A = Mesh size approximately 0.5 mm

F76S-F Reverse-rinsing filter

Red bronze housing and filter bowl. Available in sizes DN 65 to DN 100, with filter mesh sizes 100 µm or 200 µm

RV283P Check valve

Grey cast iron housing, powder coated inside and outside. DIN/DVGW tested in compulsory test sizes DN 65, DN 80 and DN 100

EN0H-1338GE23 R0807 • Subject to change

Installation Example

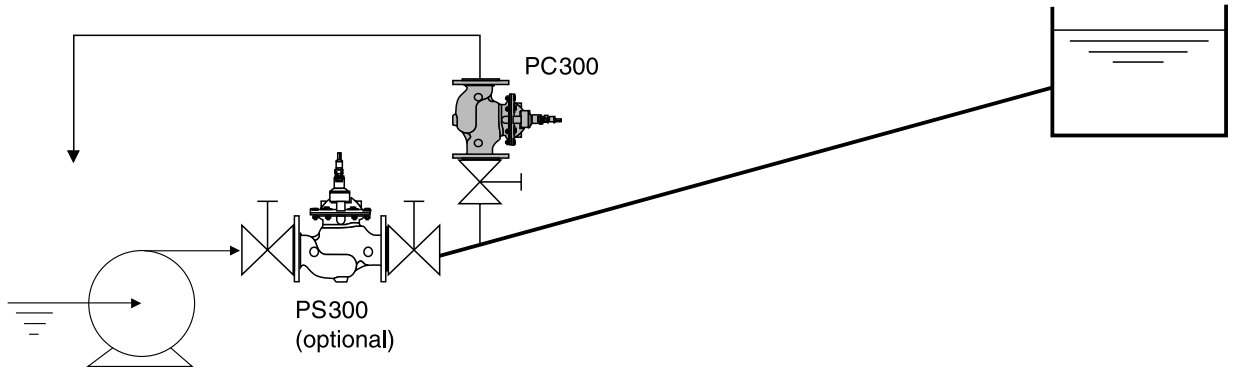

Installation Guidelines

- Install shutoff valves on both sides of the pressure sustaining valves
- Install strainer upstream of filling valve
  - o Protects against damage from coarse dirt
- Note flow direction (indicated by arrow)
- Ensure good access
  - o Simplifies maintenance and inspection
- A valve must be selected which is capable of discharging the whole available flow from the main pumped pipework
- Discharge pipework should be one size larger than the outlet connection from the valve
- PS300 pump control valve is optional
- Install connectors for removal and refitting for maintenance

Typical Applications

Surge anticipating valves of this type, within the limits of their specification, are suitable for installation in water supply systems and also in commercial and industrial installations

The following are some typical applications:

- Water pressure shock load protection in pressure boosting systems in mining
- Dedicated water supplies to industrial users

Flow Diagram

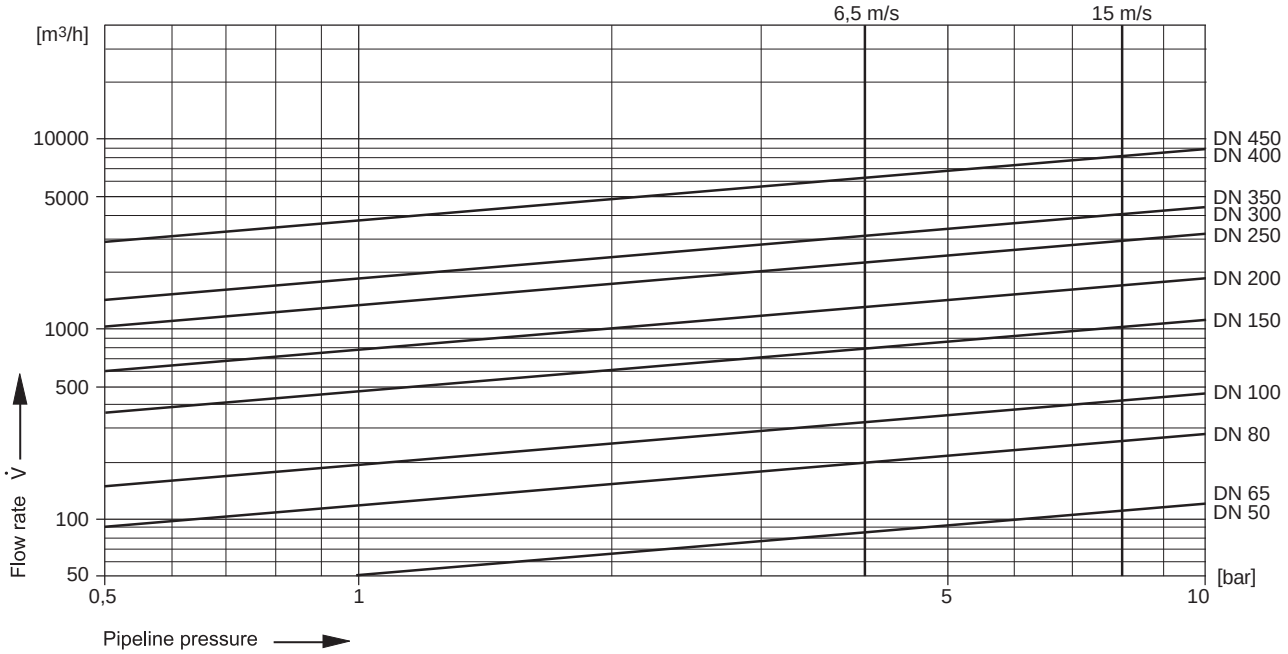

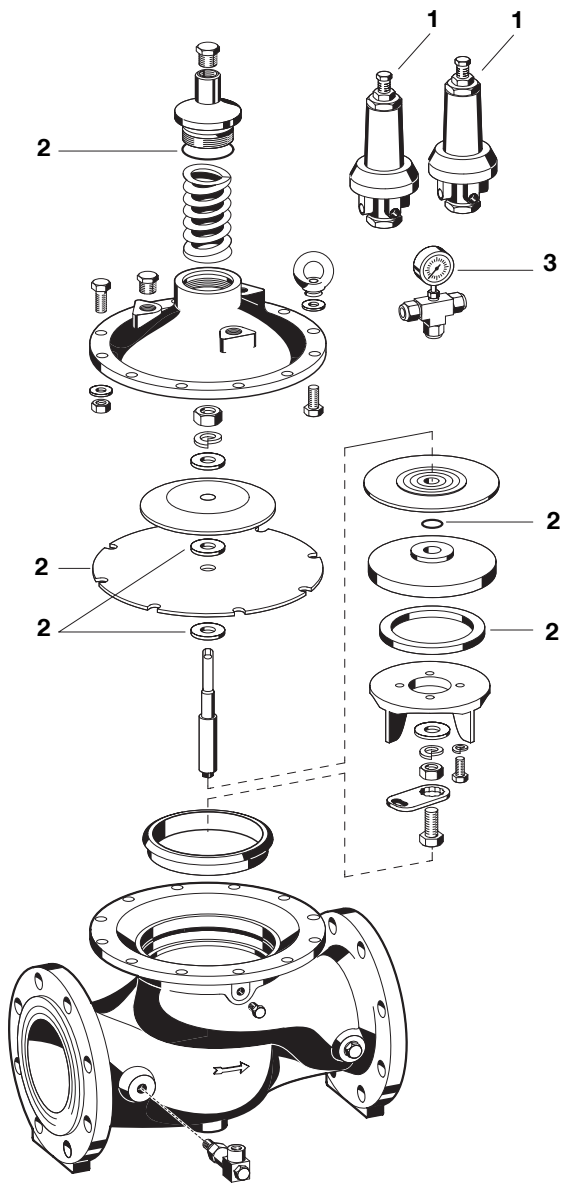

Spare Parts

Surge anticipating valve PC300, from 2002 onwards

No.	Description	Dimension	Part No.
1	Replacement pilot valve	DN 50 - DN 450	66-300
2	Set of seals	DN 65	0903751
		DN 80	0903752
		DN 100	0903753
		DN 150	0903754
		DN 200	0903755
		DN 250	0903756
		DN 300	0903757
		DN 350	0903758
		DN 400	0903759
		DN 450	0903760
3	Pressure gauge Ranges 0 - 16 bar		M39M-A16

Automation and Control Solutions
Honeywell GmbH
Hardhofweg
D-74821 Mosbach
Phone: (49) 6261 810
Fax: (49) 6261 81309
http://europe.hbc.honeywell.com
www.honeywell.com

Manufactured for and on behalf of the Environmental and Combustion Controls Division of Honeywell Technologies Sàrl, Ecublens, Route du Bois 37, Switzerland by its Authorised Representative Honeywell GmbH

EN0H-1338GE23 R0807
Subject to change without notice
© 2007 Honeywell GmbH

Honeywell